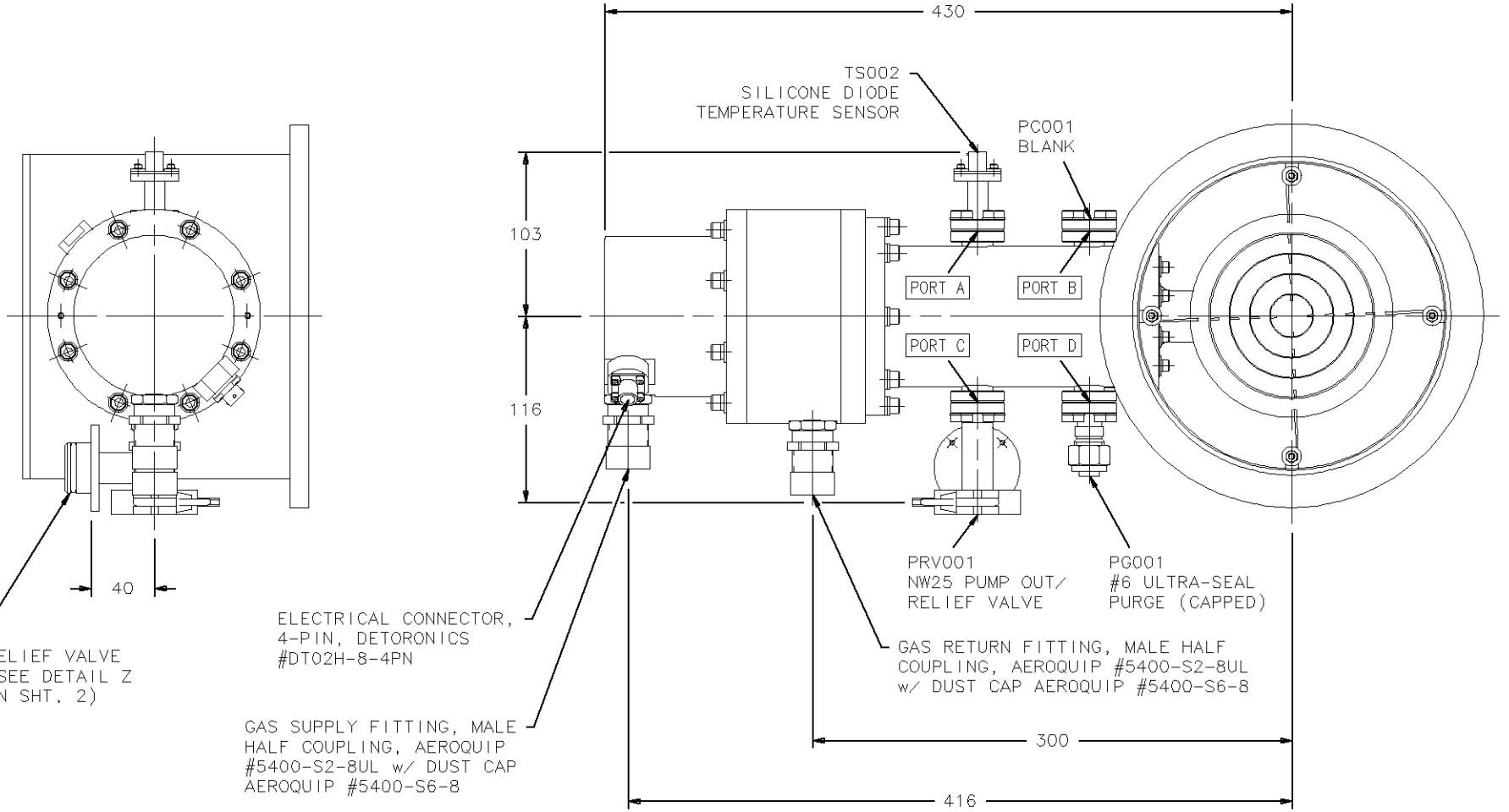

NOTE:
PORTS A, B, C & D ARE ALL 1.33"
MINI-CONFLAT FLANGES.

MATERIAL LEGEND	
DESIGNATION	MATERIAL
	ALUMINUM
	STN. STL.

DIMENSIONS ARE IN
MILLIMETERS (mm)
UNLESS OTHERWISE SPECIFIED.

PROJECT: cryopumps_cp8lp

REV.	CRSP NO.	DATE	BY	MFG.	QUAL.	ENGR.
		21 NOV 07	JPK	YB	RGS	ERS

TITLE

OUTLINE DRAWING
CRYOPUMP ASSEMBLY, CP-8LP
50/60 Hz., ISO 200 FLANGE

Sumitomo
(SHI) CRYOGENICS OF AMERICA, INC.

NO. 265121A0801R000-C
SHEET 1 OF 2

PROPRIETARY NOTICE: THIS DOCUMENT IS THE PROPERTY OF SUMITOMO (SHI) CRYOGENICS OF AMERICA, INC., AND SHALL NOT, WITHOUT THE EXPRESS WRITTEN PERMISSION OF SCAI, BE REPRODUCED OR COPIED IN WHOLE OR IN PART BY ANY PERSON OUTSIDE OF SCAI OR, IF LOANED BY SCAI TO SUCH PERSON, SHALL NOT BE USED FOR FURNISHING INFORMATION TO ANY THIRD PARTY OR FOR ANY PURPOSE OTHER THAN THAT FOR WHICH IT IS LOANED.

FORM NO. DD102099-A Rev. B (3/00)

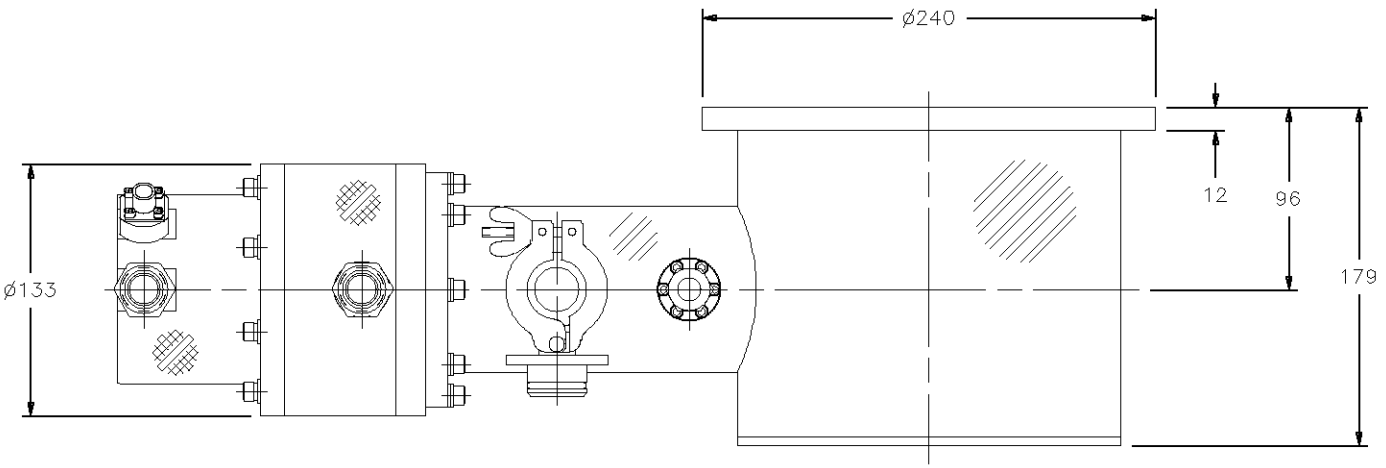

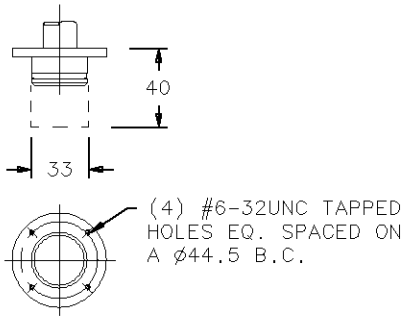

DETAIL Z- RELIEF VALVE
KEEP 33 mm DIA. x 40 mm LG.
REGION FREE OF OBSTRUCTIONS THAT
WOULD RESTRICT THE OPERATION OF
THE RELIEF VALVE POPPET.

MATERIAL LEGEND	
DESIGNATION	MATERIAL
	ALUMINUM
	STN. STL.

DIMENSIONS ARE IN
MILLIMETERS (mm)
UNLESS OTHERWISE SPECIFIED.

PROJECT: cryopumps_cp8lp

REV.	CRSP NO.	DATE	BY	MFG.	QUAL.	ENGR.
		21 NOV 07	JPK	YB	RGS	ERS

TITLE

OUTLINE DRAWING
CRYOPUMP ASSEMBLY, CP-8LP
50/60 Hz., ISO 200 FLANGE

Sumitomo
(SHI) CRYOGENICS OF AMERICA, INC.

NO. 265121A0801R000-C
SHEET 2 OF 2

PROPRIETARY NOTICE: THIS DOCUMENT IS THE PROPERTY OF SUMITOMO (SHI) CRYOGENICS OF AMERICA, INC., AND SHALL NOT, WITHOUT THE EXPRESS WRITTEN PERMISSION OF SCAI, BE REPRODUCED OR COPIED IN WHOLE OR IN PART BY ANY PERSON OUTSIDE OF SCAI OR, IF LOANED BY SCAI TO SUCH PERSON, SHALL NOT BE USED FOR FURNISHING INFORMATION TO ANY THIRD PARTY OR FOR ANY PURPOSE OTHER THAN THAT FOR WHICH IT IS LOANED.

FORM NO. DD102099-A Rev. B (3/00)